DESCRIPTION OF ICONS

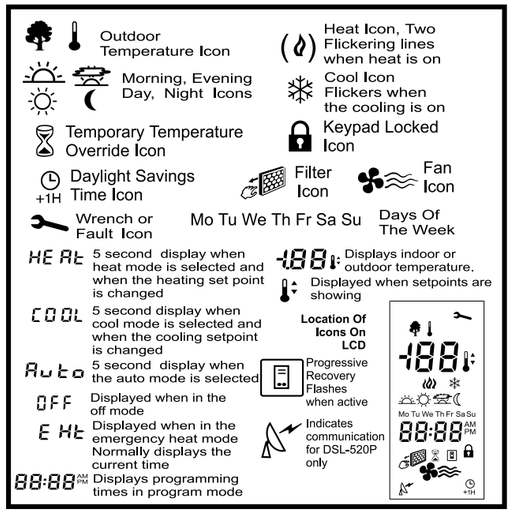

Display icons vary according to the model. Your thermostat may not display all of the icons shown.

Outdoor Hi & Lo Temperature Balance Points (Heat Pump Only)

With the optional electronic outdoor temperature sensor, you can select the outdoor balance points to inhibit the auxiliary heat and/or compressor.

HibP – Press and hold the OUTDOOR button, then press the MODE button. **HibP** will appear on the display. Raise or lower the **HibP** by pressing the ▼ or ▲ button to set the temperature above which the auxiliary heat is locked out. Press the outdoor button while showing the **HibP** and the thermostat will switch to show **LobP**. **LobP** is used to lock out the compressor. Outdoor temperatures below the **LobP** will lock out the compressor. The factory **HibP** and **LobP** setpoints are +48°C and -48°C.

DIP SWITCH OPTIONS AND FUNCTIONS

Positioning the DIP switches in either the ON or OFF position enables you to choose between two different options. The DIP switches are located on the interior of your thermostat and may be accessed by following the procedure for removing the thermostat from the subbase. The following list describes your DIP switch options.

DIP Switch No.	DIP Switch OFF	DIP Switch ON
1	Normal	Add on
2	Not used (OFF position)	Not used
3	4 minute minimum ON	2 minute minimum ON
4	Keypad unlock	Keypad lock
5	Economy	Comfort
6	Single stage	Multi-stage
7	LED #1+no icon	LED #1+ Filter icon
8	LED #2+no icon	LED #2+ Fault icon

1. **Normal or Add On Heat Pump** In the NORMAL position the thermostat will allow the compressor and the auxiliary heat to be on at the same time. In the ADD-ON position, the compressor is turned off with a call for auxiliary heat.
2. **Not Used** This switch must remain in the OFF position.
3. **2 Minute or 4 Minute ON Times** This option allows you to run the equipment for either a 2 or 4 minute minimum off and on time.
4. **Keypad Lock** In the ON position locks out all buttons except the OUTDOOR temperature button.
5. **Economy/Comfort** In the OFF position, the thermostat will be in ECONOMY mode. In the ON position the thermostat will be in COMFORT mode, and will satisfy the temperature setting using any stages necessary.
6. **Single or Multi-stage** Set to OFF for 1 compressor stage of heating or cooling (single stage) or ON for equipment with 2 compressor stages of heating and/or cooling (multi-stage).
7. **LED #1 + Indication** In the OFF position LED #1 will light when the terminal is energized. In the ON position LED #1 will light and a Filter icon will be displayed on the LCD when the terminal is energized.
8. **LED #2 + Indication** In the OFF position LED #2 will light when the terminal is energized. In the ON position LED #2 will light and a Fault icon will be displayed on the LCD when the terminal is energized.

SPECIFICATIONS

Rated Voltage	20-30 VAC, 24 nominal
Rated A.C. Current	0.050 Amps to 0.75 Amps continuous per output with surges to 3 Amps Max.
Rated D.C. Current	0 Amps to 0.75 Amps continuous per output with surges to 3 Amps Max.
Control Range	Heating: 38° to 88°F in 1° Steps 5° to 30°C in 1° Steps Cooling: 60° to 108°F in 1° Steps 16° to 40°C in 1° Steps
Thermostat Measurement Range	28° to 124°F or 0° to 48°C
O.D.T. Displayed Range	-50° to 119°F or -48° to 47°C
Control Accuracy	±0.5°C at 20°C, ±1°F at 68°F
Minimum Deadband	(between heating and cooling) 2°F or 1°C

NOTE: *This thermostat contains electronic circuitry replacing the conventional mechanical anticipator.*

One (1) Year Limited Warranty

The manufacturer warrants to the original purchaser that its product and component parts will be free from defects in workmanship and materials for a period of one (1) year from the date of purchase. Return to the original point of purchase for replacement of your product.

Warranty Limitations
This warranty begins at date of purchase.
Warranty is Void if:
The date code is defaced or removed.
The product has a defect or damage due to product alteration, connection to an improper electrical supply, shipping and handling, accident, fire, flood, lightning, or other conditions beyond the control of the manufacturer.
The product is not installed according to the manufacturer's instructions and specifications.
The product has been installed near sources of electromagnetic interference (EMI) such as arcing relay contact.
Owner's Responsibility
Provide proof of purchase.
Provide normal care and maintenance.
Pay for freight, labor and travel.
Pay for service calls related to product installation.
Return any defective product.
In no event shall the manufacturer be liable for incidental or consequential damages.
This warranty gives you specific legal rights and you may have others which vary by state and/or province. For example, some states and/or provinces do not allow the exclusion or limitation of incidental or consequential damages so this exclusion may not apply to you.
The manufacturer's continuing commitment to quality products may require a change in specifications without notice.
This equipment, if installed in strict accordance with the manufacturer's instructions, complies with the limits for a Class B computing device pursuant to Subpart J of Part 15 of FCC rules.

Operating Instructions

Two Compressor Heatpump with Auxiliary Heat Non-Programmable Thermostat

Model **DSL-600**

NEW & IMPROVED FEATURES

Your new electronic thermostat has been made even better by the introduction of several new and improved features. Building on its reputation for efficient and dependable operation, your thermostat now offers the following list of enhancements.

Thermostat and Sensor Calibration
Release 3 provides easy calibration of the thermostat and remote sensors. Simply press and hold the FAN button for 10 seconds and adjust with the ▲ or ▼ buttons.

Push Button Auto Repeat
Programming is easier with the push button auto repeat feature.

GENERAL INFORMATION

The thermostat normally displays room temperature, mode of operation and whether cooling or heating is currently on. The six buttons on the front of the unit allow complete control of your equipment.

You may select different heating and cooling setpoints for the system to maintain, e.g., 70° in heating and 75° in cooling. Raising or lowering the setpoints in heating or cooling is as simple as pushing a button. In addition, you may choose to display the temperature in °F or °C.

The thermostat also allows you to select continuous fan operation (useful when using an air cleaner), or have the fan come on with the equipment.

BUTTON FUNCTIONS

Outdoor	Press to display the outdoor temperature (optional)
Mode	Press to select cool only, heat only, auto (cool & heat), off, or emergency heat
Fan	Press for continuous fan or auto fan
Day/Night	Press to alternate between day and night temperature setpoints

ENERGY STAR COMPLIANT

Energy Star labeled products use less energy than other products, save you money on utility bills and help protect the environment. Energy Star setpoints are now standard on all thermostats to ensure maximum efficiency and comfort.

Non-Programmable
Heating 70°F (21°C)/Setback Heating 62°F (17°C)
Cooling 78°F (25°C)/Setback Cooling 82°F (27°C)

Programmable Heating
Morning 70°F (21°C) Day 62°F (17°C)
Evening 70°F (21°C) Night 62°F (17°C)

Programmable Cooling
Morning 78°F (25°C) Day 85°F (28 °C)
Evening 78°F (25°C) Night 82°F (27°C)

USER CONTROLS

MODE

Select the desired mode of operation by repeated pressing of the MODE button:

- ❄ – Indicates cooling system only (the word COOL is displayed for 5 seconds)
- 🔥 – Indicates heating system only (the word HEAT is displayed for 5 seconds)
- 🔥❄ – Indicates both the heating & cooling systems (the word AUTO is displayed for 5 seconds)
- ❄ – **Blinking** indicates cool ON
- 🔥 – **Flickering** indicates heat ON
- **OFF** – Disables controller so equipment will not operate (fan operation is still possible in this mode)
- **Eht** – Emergency heat

COOLING: ❄
Select the temperature you want your equipment to maintain while in the COOLING mode by pressing and holding the ▲ or ▼ buttons. The control setpoint temperature is displayed for 5 seconds.

HEATING: 🔥
Select the temperature you want your equipment to maintain while in the HEATING mode by pressing and holding the ▲ or ▼ buttons. The control setpoint temperature is displayed. Your new electronic digital thermostat has been designed to provide accurate control and display of room temperature. It will also display all relevant information of the system.

FAN: ✤≋
The fan will come on automatically when the system is operating, but there is no indication of this on the display. To select continuous fan operation, press the FAN button and the display will show ✤≋. This is recommended for electronic air cleaners and continuous ventilation requirements.

TEMPORARY TEMPERATURE OVERRIDE WITH KEYPAD LOCKED

(The keypad may be locked to prevent tampering by selecting the ON position of DIP switch #4.)
If the keypad is locked to prevent tampering you may still temporarily adjust the setpoint by ± 3° C or 6°F of the programmed day setpoint. Press the ▲ or ▼ to raise or lower the setpoint for a 1-hour period.

OFF MODE

To turn off the heating or cooling system, press the MODE button until the word OFF appears on the LCD. It will remain displayed until the mode is changed. The OFF mode prevents the system from being energized.

Avoid using the OFF mode during extremely cold weather to prevent damage to the equipment from freezing.

AUTO CHANGEOVER MODE 🔥❄

You may set the thermostat to automatically switch from HEATING to COOLING mode by pressing the MODE button until the word AUTO and both the heating 🔥 and cooling ❄ icons appear on the LCD. The thermostat will energize the heating or cooling system based on the temperatures established for both modes.

USER CONTROLS (CONT)

OUTDOOR (ODT) BUTTON

If your thermostat has been installed with an electronic outdoor remote sensor, you may view the outdoor temperature simply by pressing the OUTDOOR button. Upon releasing the button, the thermostat will once again display the indoor temperature.
If the option is not connected, the thermostat will display ---.

DAY/NIGHT BUTTON

When the thermostat is initially installed, the display will show the symbol for your day temperature. By pressing the DAY/NIGHT button you may select an alternate or night temperature (the thermostat will remember this setpoint). Simply press the DAY/NIGHT button to alternate between temperature settings.

CELSIUS / FAHRENHEIT

Simultaneously press ▲ and ▼ to switch between Celsius (C) and Fahrenheit (F) temperature display.

REMOTE SENSOR (OPTION)

RS1 – RS2 – RS+V

The thermostat is designed to accept the electronic remote sensor which will allow you to locate your thermostat in an area away from view. Indoor and outdoor sensors are available separately.

CLOCK TERMINALS (OPTION) CLK1 – CLK2

Your thermostat is equipped with a dry contact closure input. By connecting to any relay-based controller or clock timer (DSP-AT or equivalent), the thermostat can be alternated between the DAY/NIGHT (setback) temperature setpoints automatically. Upon initial power up of the thermostat or after a power failure, the thermostat will check the clock terminals and apply the DAY (open contact) or NIGHT (closed contact) temperature setpoints accordingly.

ECONOMY / COMFORT

In the ECONOMY mode (switch #5 OFF) your thermostat will not allow the equipment to be forced on with a change to the temperature setpoint. In the COMFORT mode, the equipment will turn on immediately with a change to the temperature setpoint.

TEMPERATURE ACCURACY

Full temperature accuracy will only be realized after the thermostat has been installed and powered for at least one (1) hour.

ADD-ON HEAT PUMPS

Your DSL thermostat is equipped to enhance the performance of an add-on heat pump. Your thermostat, in most applications, will perform the function of a fossil fuel kit.

To select ADD-ON, place switch #1 to the ON position. The thermostat will turn the compressor off with a call for auxiliary heat. When the switch is set to NORMAL, the thermostat will allow the compressor and the auxiliary heat to be on at the same time.

POWER FAILURES

Your thermostat employs the latest in solid state electronic technology.

One of the unique features of your thermostat is that there is no battery required to maintain your selected setpoints in the event of a power loss as the memory is unaffected by power failures of any duration.

When power is restored, the thermostat will continue operating as if the power had never been off.

INSTALLATION INSTRUCTIONS

CAUTION
THIS DEVICE SHOULD BE INSTALLED BY A QUALIFIED TECHNICIAN WITH DUE REGARD FOR SAFETY, AS IMPROPER INSTALLATION COULD RESULT IN A HAZARDOUS CONDITION

LOCATION

To ensure proper operation, the thermostat should be mounted on an inside wall in a frequently occupied area of the building. In addition, its position must be at least 18" (46cm) from any outside wall, and approximately 5' (1.5m) above the floor in a location with freely circulating air of an average temperature. You should avoid the following locations:

- behind doors or in corners where freely circulating air is unavailable;
- where direct sunlight or radiant heat from appliances might affect control operation;
- on an outside wall;
- adjacent to, or in line with, conditioned air discharge grilles, stairwells, or outside doors;
- where its operation may be affected by steam or water pipes or warm air stacks in an adjacent partition space, or by an area behind the thermostat which is not climate controlled;
- where its operation will be affected by the supply air of an adjacent climate control HVAC device; and
- near sources of electrical interference such as arcing relay contacts.

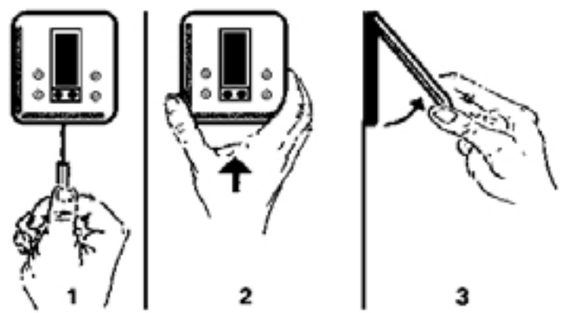

REMOVING THE THERMOSTAT FROM THE SUBBASE

1. Insert a flat blade screwdriver or a coin 1/8" into the slot located in the bottom center of the thermostat case and twist 1/4 turn. When you feel or hear a "click," grasp the case from the bottom two corners and separate from the subbase. *Some models require more force than others when separating due to the number of terminals on the subbase.*
2. Swing the thermostat out from the bottom.
3. Lift the thermostat up and off the subbase.
4. Place the rectangular opening in the subbase over the equipment control wires protruding from the wall and, using the subbase as a template, mark the location of the two mounting holes (exact vertical mounting is necessary only for appearance).
5. Use the supplied anchors and screws for mounting on drywall or plaster; drill two 3/16" (5mm) diameter holes at the marked locations; use a hammer to tap the nylon anchors in flush to the wall surface and fasten subbase using the supplied screws. (Do not overtighten!)
6. Connect the wires from your system to the thermostat terminals. Carefully dress the wires so that any excess is pushed back into the wall cavity or junction box. Ensure that the wires are flush to the plastic subbase. The access hole should be sealed or stuffed to prevent drafts from the wall affecting the thermostat.
7. Before the thermostat is reinstalled on the subbase, install the optional clock/timer, indoor remote sensor and outdoor remote sensor, if used. Refer to the installation instructions supplied with each option. Also check the position of the DIP switches on the back of the thermostat.

INSTALLATION INSTRUCTIONS (CONT)

REPLACING THE THERMOSTAT ON SUBBASE

1. Position the thermostat on the hinged tabs at the top of the subbase.
2. Gently swing the thermostat down and press on the bottom center until it snaps into place.

THERMOSTAT COVER LOCK

You may lock the cover down to prevent unauthorized access to the thermostat by adding the plastic lock (included in the installation bag). Insert the plastic lock piece into the bottom of the mounted base. The ends of the lock piece fit snugly under the lock pins extending from the bottom of the mounted base. The tab in the middle of the lock piece extends down from the base.
To release the locking mechanism, press the lock piece up and into the base while gently prying open.

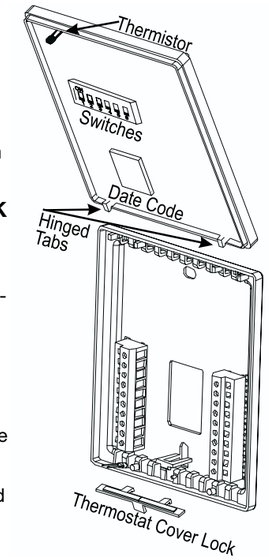

THERMISTOR MOUNTING INSTRUCTIONS

When placing the front cover on the thermostat ensure the thermistor is not bent or misaligned.
Ensure that the thermistor does not touch the thermostat case.
The thermistor should be placed horizontal to the wall. Ensure the thermistor is not pushed upward into the case.
The thermistor should be aligned so it is visible between the ribs on the bottom of the subbase.

THERMISTOR MOUNTING INSTRUCTIONS

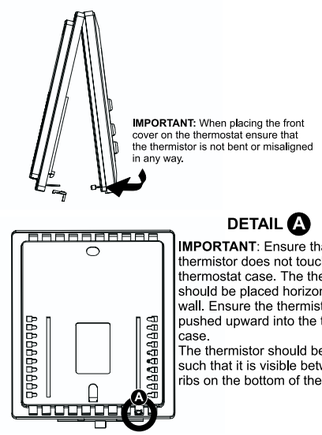

Outside rear view with backplate closed

WIRING DIAGRAM

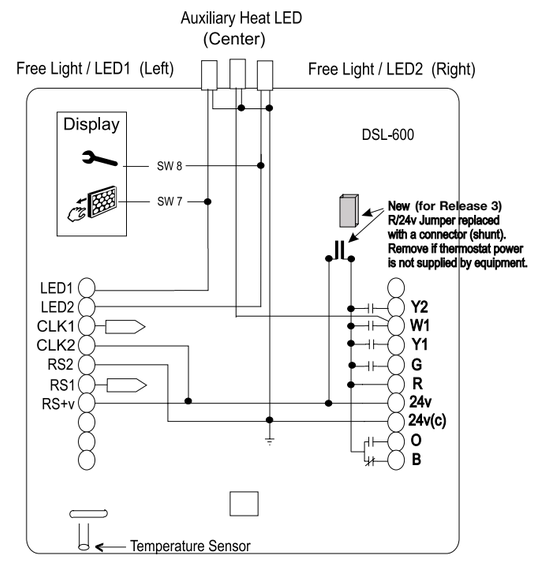

Note: *If the 24V(c) is not available from the equipment, the shunt may be removed and a separate 24V transformer must then be used to power the thermostat. To remove jumper (labeled JP1) from the printed circuit board, pull straight out.*

This thermostat may be used with 24 Volt DC. The negative side of the DC supply must be wired to the 24V (c) terminal.

TERMINAL DESIGNATIONS

Y2 . . . . . Compressor is energized for 2nd stage heating or cooling (if multistage is selected)
W1 . . . . . Auxiliary heat is energized as back-up or emergency heat
Y1 . . . . . Compressor is energized with a call for heating or cooling
G . . . . . Fan operates with a call for heating or cooling or by pressing the FAN button
R . . . . . Power from equipment

24V. . . . . 24V(c) 24 VAC hot and common to power the thermostat

O . . . . . Energizes the reversing valve continuously in COOL mode
B . . . . . Energizes the reversing valve continuously in HEAT or OFF modes

RS2 . . . . . RS1 RS+V Use to connect up to 6 (SL-IDS) indoor and/or 1 (SL-ODT) outdoor remote sensor/s. When connected the thermostat will automatically use the SL-IDS temperature sensor and not its own. Refer to the instructions included with the sensor.

LED1 . . . . LED2 Free lights for status or function indication

CLK1 . . . . CLK2 Use with dry contact relay or DSP-AT for alternate setpoints